Lamp with transformer

FTHTR - Three-phase BTA - Ø22mm

Faz/engineering
Innovative and industrial signage and applications
by Fazim/Group

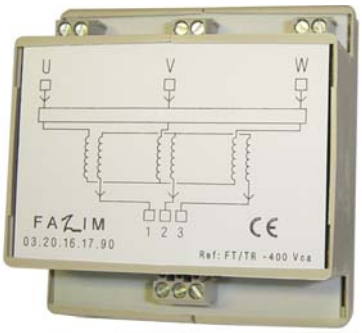

Reference :

HTR + VOLTAGE + CA + *COLORS* + 22

Example : HTR400CARVJ22

Generalities

We present here the three-phase FTHTR signal lamps ! It is intended for the « three-phase voltage presence ». FTHTR to Fixed light, Three-phase, LED arranged in Horizontal and TRansfomer. it's a 3 in 1 ! The LED lamp, very low-voltage (<48V), can be mounted on electrical cabinet door with safety.

Description

• Body : Co-polyamide , fixing plastic nut, diameter 22 mm (0.866"), IK10, IP67 in front face, through the flat gasket provided, RoHS compliant, CE, UL 94 V-0. (also available with LED lamp diameter 30 mm).

• Front face : 3 color LED placed in horizontal : red (R), green (V), yellow (J), orange (O), white (Bc), ou blue (Be) high brightness, + 1 transparent cap. See also FTTTR version, with LED arranged in triangle.

• Converter enclosure : beige polyamide PA6 (UL 94-HB), rail DIN foot black polyamide PA66 (UL 94-V2).

Technical specifications

• Supply voltages between 2 phases and consumptions for 1 (+/-20%), at 50Hz :

Voltages / Colors	110Vac	127Vac	230Vac	400Vac	440Vac	460Vac	490Vac
R, V, J, O	100 mVA Cos φ : 0.7 Inductive	130 mVA Cos φ : 0.7 Inductive	350 mVA Cos φ : 0.7 Inductive	1.2 VA Cos φ : 0.7 Inductive	1.4 VA Cos φ : 0.19 Capacitive	600 mVA Cos φ : 0.19 Capacitive	700 mVA Cos φ : 0.19 Capacitive
V, B, Bc	100 mVA Cos φ : 0.7 Inductive	130 mVA Cos φ : 0.7 Inductive	400 mVA Cos φ : 0.7 Inductive	1.3 VA Cos φ : 0.7 Inductive	1.5 VA Cos φ : 0.19 Capacitive	650 mVA Cos φ : 0.19 Capacitive	800 mVA Cos φ : 0.19 Capacitive

(See also BTB voltages, 500 Vac to 1000Vac and filter against harmonics versions «FI»)

• Conformities : Norms EN55015, EN61547, EN61000-6-2, EN61000-6-4, RoHS, Reach, CE.

• Lifetime (MTBF*) : 100 000 hours.

• Operating temperature : -30°C à +70°C (22°F to 158°F).

• Supply power frequency : 50/60Hz.

• IP protection standard : IP67 (lamp).

• IK protection standard : IK10 (lamp).

(* : mean time between failure)

Advantages

•Insensitivity to vibrations, mechanical shocks.
•Resistance to moisture and water splashes.
•Electrical shocks resist : 5KV during 50µs.
•Immunity against magnetic fields.
•Assembly and disassembly easy, fast and secure .
•Exceptionally long life and unparalleled.
•Low power consumption and heat dissipation.
•Custom writing, custom silk-screen printing ability.

Connections

- Lamp : 3 quick-fits male 6.3mm (0.25 in)
- Converter : 4 screw terminals.

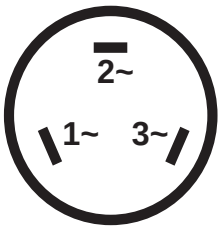

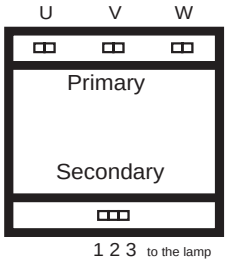

3 terminals on primary :
U = Ph1 ; V = Ph2 ; W = Ph3

1 terminal on secondary :
Pin number 1 converter to number 1 Lamp, 2 to 2 and 3 to 3.

Electrical symbol

- Internal electrical wiring wye

Lamp :

Converter :

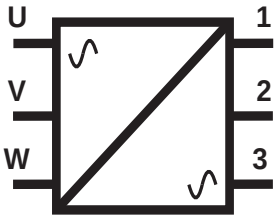

Mechanical specifications

- Fixing : standard drilling Ø22mm +/-0.5mm ; (Ø 0.87 in).

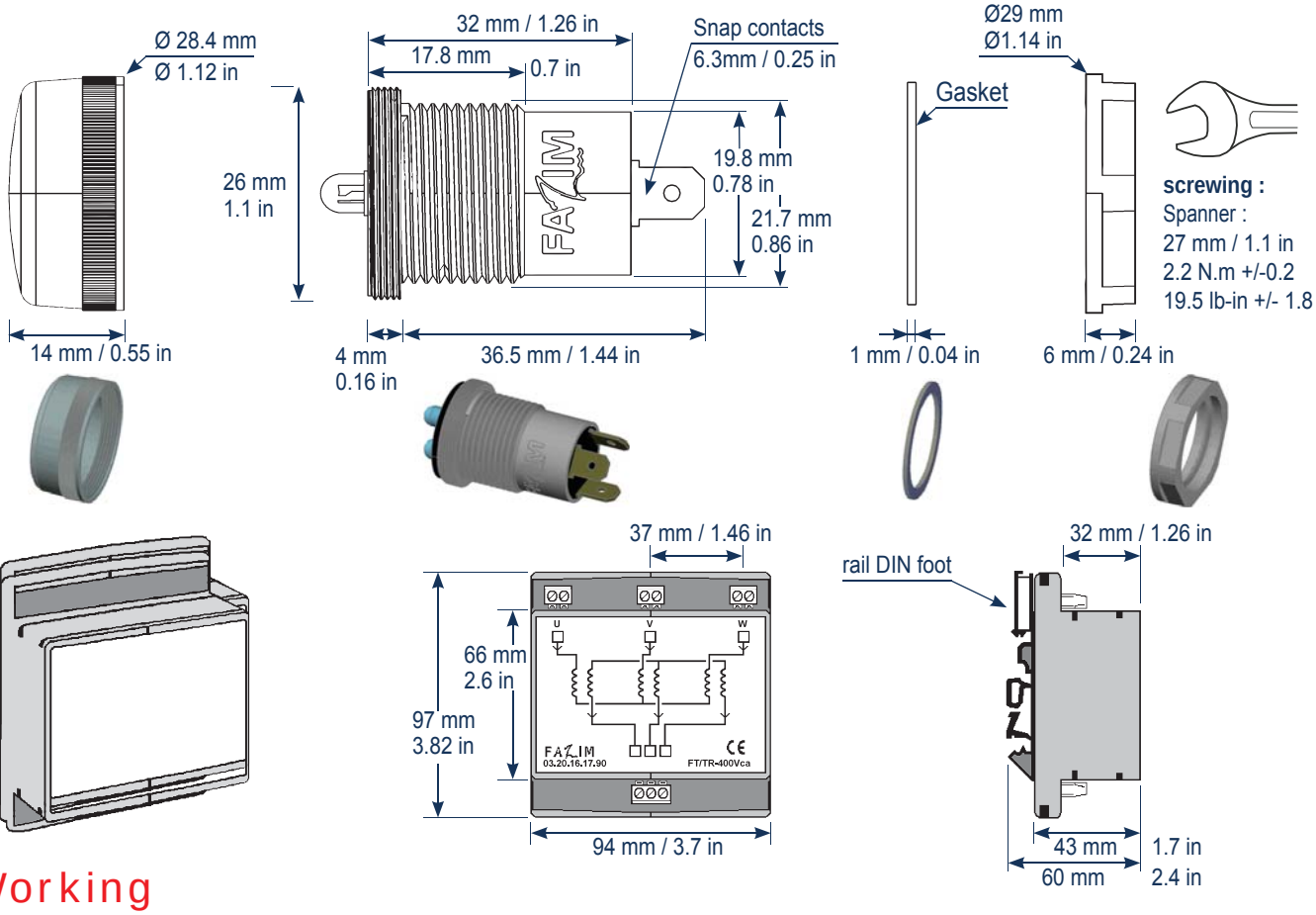

Working

- Off :

- On :

Ph1 + Ph2

Ph1 + Ph3

Ph2 + Ph3

Ph1 + Ph2 + Ph3

Options & warranty

- Options : Other voltages and frequencies on request, anti harmonic filter, color LED, color cap, output wiring terminals or snap contact with screw…
- Warranty : 24 months manufacturer. No Quick-Fit Terminal Male must be welded or lose the guarantee.
- Recommendation : The Quick-Fit Terminal Male must be completely covered with isolation that can be removed only by destruction.