Beacon lights - Ø 70mm

AC voltage - Light and beep

Faz/engineering
innovative and industrial signage and applications
by Fazim/Group

Reference :

FZ70 - Voltage + CA + *Color*

Example : FZ70230CABc

+ Specify options (flashing, beep, ...)

Generalities

The small Beacons, Lights Ø 70mm, are sealed equipment (IP65), for signaling security. Fixed light, flashing or customisable version, with or without sound beep, they are found most often in the industry, machinery, electrical cabinet, loading dock, mobile barrier and the rail domain ...

Description

- Base : In white polycarbonate, fixed by 2 screws tapping, the product is RoHS.
- Dôme : Transparent polycarbonate or orange, fixing the base: ¼ turn. Excellent UV resisting.
- Gaskets : O-ring between the dome and the base and an seal 3mm thick in the base, making the product an IP65.
- Lighting : 24 LED high brightness, angle φ = 20 °, Color: Red (R), Green (G), Amber (A), White (Bc) and blue (Be), on demand pink (Ro), Violet (Vi), two-colored and multi-colored RGB LED.

Optional on request, High light LED with 3 LED power angle φ = 120 °, with 500 Lumens in white !

Technical specifications

- Supply voltage and average consumption 50/60Hz (+/-20%) in rotating light :

Colors \ Voltages	24Vac	48Vac	90 to 230 Vac	150 to 400Vac
R, J, O	1.4 VA Cos φ : 1 Résistive	2.7 VA Cos φ : 0.1 Capcitive	1,8 VA à 230Vca Cos φ : 0.85 Inductive	-
V, Be, Bc	2.7 VA Cos φ : 1 Résistive	2.7 VA Cos φ : 0.1 Capacitive	3,4 VA à 230Vca Cos φ : 0.85 Inductive	-

- Conformities : Norms EN55015, EN61547, EN61000-6-2, EN61000-6-4, ROHS, Reach, CE.
- Lifetime (MTBF*) : 100 000 hours.
- Operating temperature : -30°C à +70°C. (22°F to 158°F)
- IP protection standard : IP65

(* : mean time between failure)

Advantages

- Insensitivity to vibrations, mechanical shocks.
- Resistance to moisture and water splashes.
- Electrical shocks resist : 5KV during 50µs.
- Immunity against magnetic fi elds.
- Assembly and disassembly easy, fast and secure .
- Exceptionally long life and unparalleled.
- Low power consumption and heat dissipation.

Connections

• Terminal under the beacon

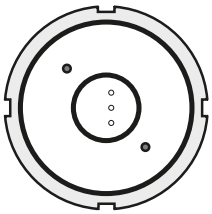

1 : «~» L1 (Phase 1)
2 : «~» L2 or N (Phase 2 or neutral)
3 : No connected

Terminal or output wiring (50cm) (19.7'').

Electrical symbol

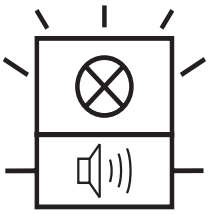

(Beep in option)

Mechanical specifications

• Fixing : 2 tapping screws (no supplied), spacing 50mm (1,97'').

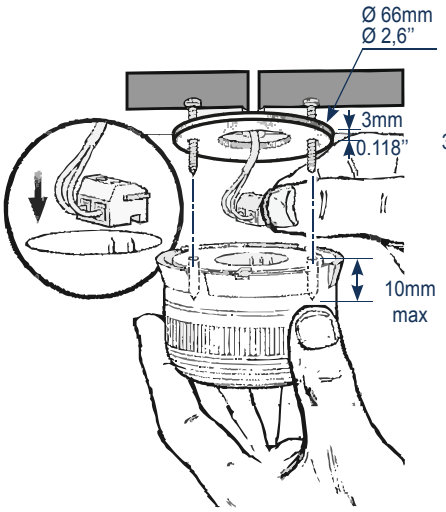

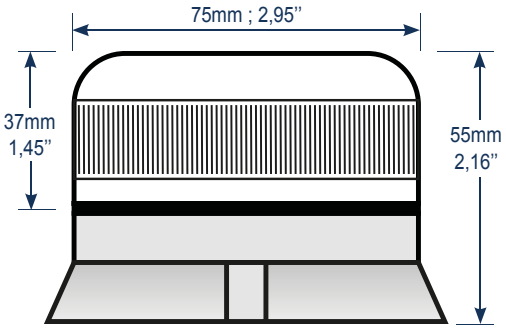

Fixing cap quarter turn.

O-ring seal between base and cabochon for IP65.

3mm elastomer gasket, the base and your wall carrier to IP65

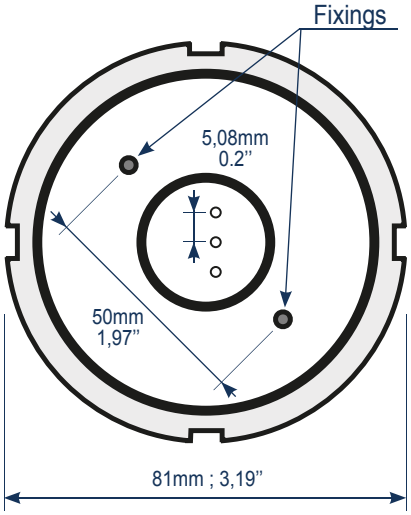

Working

Setings :

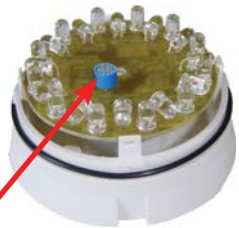

Frequency setting
blinking 0,5 to 4 Hz

When supply on, the beacon will illuminate in fixed light.

With flashing option, the flashing frequency will be adjustable flashing, take off the cap and turning the potentiometer. the frequency is adjustable from 0.5 to 4 Hz or customizable depending on the options requested.

With Beep option, a sound with a frequency 1KHz will be flashing at the same speed than previously set.

Options & warranty

• Options : On request, other voltages, anti harmonic filters for the power supply. Specific support plastic base. Customization program tailored.External pilot (RS232 or other). Power LED, LED colors, two-color version, three-color version, Beep sound, 85 db siren with choice of sound ...

• Warranty : 24 months manufacturer. No terminal or other metalic thing must be welded or lose the guarantee.

• Recommendation : Cable section, more or equal to 0.6mm² up to 48Vdc, and more or equal to 1mm² beyond 48Vdc. Cable ends must be finished with any crimp terminal.