Signal Lamp

F - AC voltage - Ø 8mm

Faz/engineering
innovative and industrial signage and applications
by Fazim/Group

Reference :
VOLTAGE + CA + *COLOR* + 8

Example : 230CAR8

Generalities

We present here the Ø8mm LED signal lamps in single-phase voltage and into a very reduced size ! Perfect for your synoptic board or electrical cabinet, with 1 LED, in fixed light for « voltage presence ». The proven robustness of these lights, you can install them in humid and disturbed environments.

Description

• Body : In plastic, nut mounting galvanized steel, brake galvanized steel ring, diam 8mm (0.315"), IP67 in front face thanks to sealing ring gasket on the LED and the flat gasket on the body, Rohs compliant, CE & UL.

•Front face : 1 color LED, epoxy lense, lense diameter 5mm.
Available colors : red (R), green (V), yellow (J), white (Bc), or blue (Be).
Brightness : Red (5mcd), Green (4mcd), Yellow (3mcd), Blue (30mcd), White (25mcd).
Wavelength : Red (625nm), Green (568nm), Yellow (588nm), Blue (470nm) and white (X=0.31/y=0.31).

Technical specifications

• Supply voltages and consumptions (+/-20%), 50/60Hz :

Voltages / Colors	24Vac	48Vac	127Vac	230Vac
R, V, J	72 mVA Cos φ : 1	144 mVA Cos φ : 1	380 mVA Cos φ : 1	760 mVA Cos φ : 1
Be, Bc	60 mVA Cos φ : 1	120 mVA Cos φ : 1	320 mVA Cos φ : 1	575 mVA Cos φ : 1

• Conformities : Norms EN55015, EN61547, EN61000-6-2, EN61000-6-4, RoHS, Reach, CE, UL.

• Lifetime (MTBF*) : 50 000 hours.

• Operating temperature : -25°C à +60°C (-13°F to 140°F).

• IP protection standard : IP67 (in front face).

(* : mean time between failure)

Advantages

•Insensitivity to vibrations, mechanical shocks.
•Resistance to moisture and water splashes.
•Electrical shocks resist : 5KV during 50µs.
•Immunity against magnetic fields.
•Assembly and disassembly easy, fast and secure .
•Exceptionally long life and unparalleled.
•Low power consumption and heat dissipation.

eco-Solutions · RoHS compliant · REACH COMPLIANCE · CE · Made in FRANCE

Connections

- 2 Quick-Fit male terminals 2.8mm (0.110'')
- or output wiring terminals about 30cm

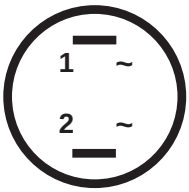

~ ou 1 : Gold lug.

~ ou 2 : Silver lug.

Electrical symbol

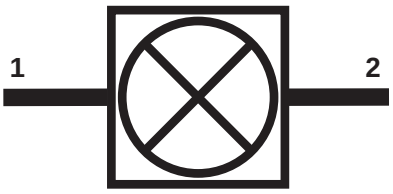

Caractéristiques mécaniques

- Fixing : standard drilling Ø8mm (0.315''), +/-0.5mm

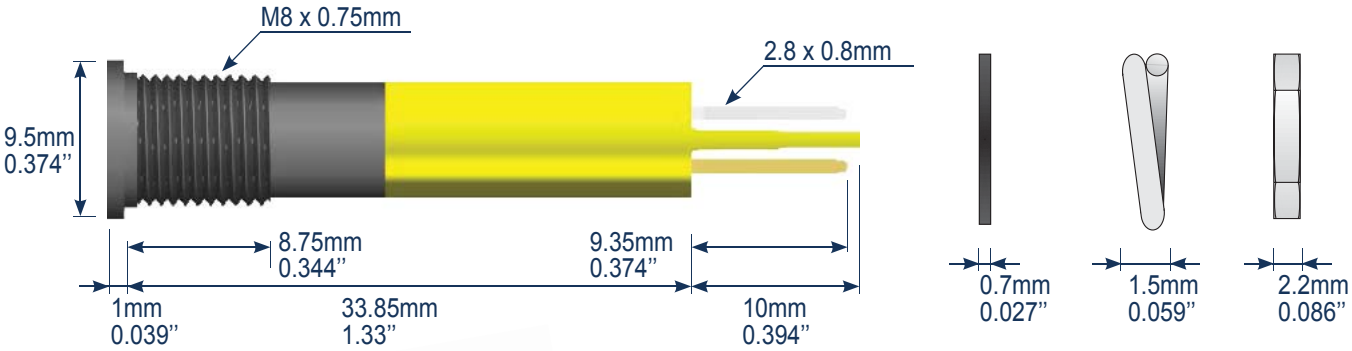

Working

- Off :
- On :

Options & warranty

- Options : On request, other voltages, output wiring.
- Warranty : 12 month manufacturer. Never dismantle the body's lamp, don't break or burn the lamp with an external device or lose the guarantee.
- Recommendation : The Quick-Fit Terminal Male must be completely covered with isolation that can be removed only by destruction.
(example : electrical insulated connectors or heat shrink tubing.